Cambridge International AS & A Level

Cambridge International Examinations
Cambridge International Advanced Subsidiary and Advanced Level

PHYSICS **9702/13**

Paper 1 Multiple Choice **October/November 2018**

1 hour 15 minutes

Additional Materials: Multiple Choice Answer Sheet
Soft clean eraser
Soft pencil (type B or HB is recommended)

4302523063

READ THESE INSTRUCTIONS FIRST

Write in soft pencil.
Do not use staples, paper clips, glue or correction fluid.
Write your name, Centre number and candidate number on the Answer Sheet in the spaces provided unless this has been done for you.
DO **NOT** WRITE IN ANY BARCODES.

There are **forty** questions on this paper. Answer **all** questions. For each question there are four possible answers **A**, **B**, **C** and **D**.
Choose the **one** you consider correct and record your choice in **soft pencil** on the separate Answer Sheet.

Read the instructions on the Answer Sheet very carefully.

Each correct answer will score one mark. A mark will not be deducted for a wrong answer.
Any working should be done in this booklet.
Electronic calculators may be used.

IB18 11_9702_13/RP
© UCLES 2018

Data

speed of light in free space	$c = 3.00 \times 10^{8}\,\text{m s}^{-1}$
permeability of free space	$\mu_0 = 4\pi \times 10^{-7}\,\text{H m}^{-1}$
permittivity of free space	$\varepsilon_0 = 8.85 \times 10^{-12}\,\text{F m}^{-1}$
	$\left(\frac{1}{4\pi\varepsilon_0} = 8.99 \times 10^{9}\,\text{m F}^{-1}\right)$
elementary charge	$e = 1.60 \times 10^{-19}\,\text{C}$
the Planck constant	$h = 6.63 \times 10^{-34}\,\text{J s}$
unified atomic mass unit	$1\,\text{u} = 1.66 \times 10^{-27}\,\text{kg}$
rest mass of electron	$m_\text{e} = 9.11 \times 10^{-31}\,\text{kg}$
rest mass of proton	$m_\text{p} = 1.67 \times 10^{-27}\,\text{kg}$
molar gas constant	$R = 8.31\,\text{J K}^{-1}\,\text{mol}^{-1}$
the Avogadro constant	$N_\text{A} = 6.02 \times 10^{23}\,\text{mol}^{-1}$
the Boltzmann constant	$k = 1.38 \times 10^{-23}\,\text{J K}^{-1}$
gravitational constant	$G = 6.67 \times 10^{-11}\,\text{N m}^2\,\text{kg}^{-2}$
acceleration of free fall	$g = 9.81\,\text{m s}^{-2}$

© UCLES 2018

Formulae

uniformly accelerated motion	$s = ut + \frac{1}{2}at^2$ $v^2 = u^2 + 2as$
work done on/by a gas	$W = p\Delta V$
gravitational potential	$\phi = -\frac{Gm}{r}$
hydrostatic pressure	$p = \rho gh$
pressure of an ideal gas	$p = \frac{1}{3}\frac{Nm}{V}\langle c^2 \rangle$
simple harmonic motion	$a = -\omega^2 x$
velocity of particle in s.h.m.	$v = v_0 \cos \omega t$ $v = \pm\omega\sqrt{(x_0^2 - x^2)}$
Doppler effect	$f_o = \frac{f_s v}{v \pm v_s}$
electric potential	$V = \frac{Q}{4\pi\varepsilon_0 r}$
capacitors in series	$1/C = 1/C_1 + 1/C_2 + \ldots$
capacitors in parallel	$C = C_1 + C_2 + \ldots$
energy of charged capacitor	$W = \frac{1}{2}QV$
electric current	$I = Anvq$
resistors in series	$R = R_1 + R_2 + \ldots$
resistors in parallel	$1/R = 1/R_1 + 1/R_2 + \ldots$
Hall voltage	$V_H = \frac{BI}{ntq}$
alternating current/voltage	$x = x_0 \sin \omega t$
radioactive decay	$x = x_0 \exp(-\lambda t)$
decay constant	$\lambda = \frac{0.693}{t_{\frac{1}{2}}}$

© UCLES 2018

1 Which statement is **not** a reasonable estimate?

A Atmospheric pressure at sea level is about 1×10^5 Pa.

B Light takes 5×10^2 s to reach us from the Sun.

C The frequency of ultraviolet light is 3×10^{12} Hz.

D The lifespan of a man is about 2×10^9 s.

2 Three of these quantities have the same unit.

Which quantity has a different unit?

A $\frac{\text{energy}}{\text{distance}}$

B force

C power × time

D rate of change of momentum

3 Which group of quantities contains only vectors?

A acceleration, displacement, speed

B acceleration, work, electric field strength

C displacement, force, velocity

D power, electric field strength, force

4 An ammeter is calibrated so that it shows a full-scale deflection when it measures a current of 2.0 A.

The diagram shows the display of this ammeter when it is measuring a current.

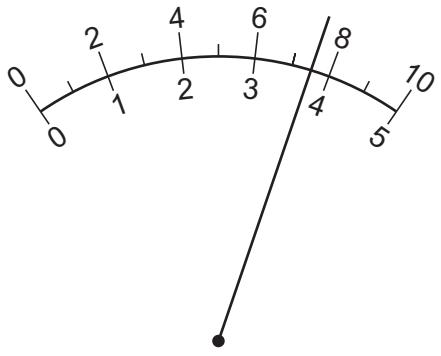

Which current is the ammeter measuring?

A 0.75 A **B** 1.5 A **C** 3.8 A **D** 7.5 A

© UCLES 2018

5 The width of a table is measured as (50.3 ± 0.1) cm. Its length is measured as (1.40 ± 0.01) m.

What is the area of the table and its absolute uncertainty?

A $(0.7 \pm 0.1)\,m^2$

B $(0.704 \pm 0.006)\,m^2$

C $(0.704 \pm 0.011)\,m^2$

D $(70.4 \pm 0.6)\,m^2$

6 A stone is projected horizontally at time $t = 0$ and falls. Air resistance is negligible. The stone has a horizontal component of velocity v_H and a vertical component of velocity v_V.

Which graph shows how v_H and v_V vary with time t?

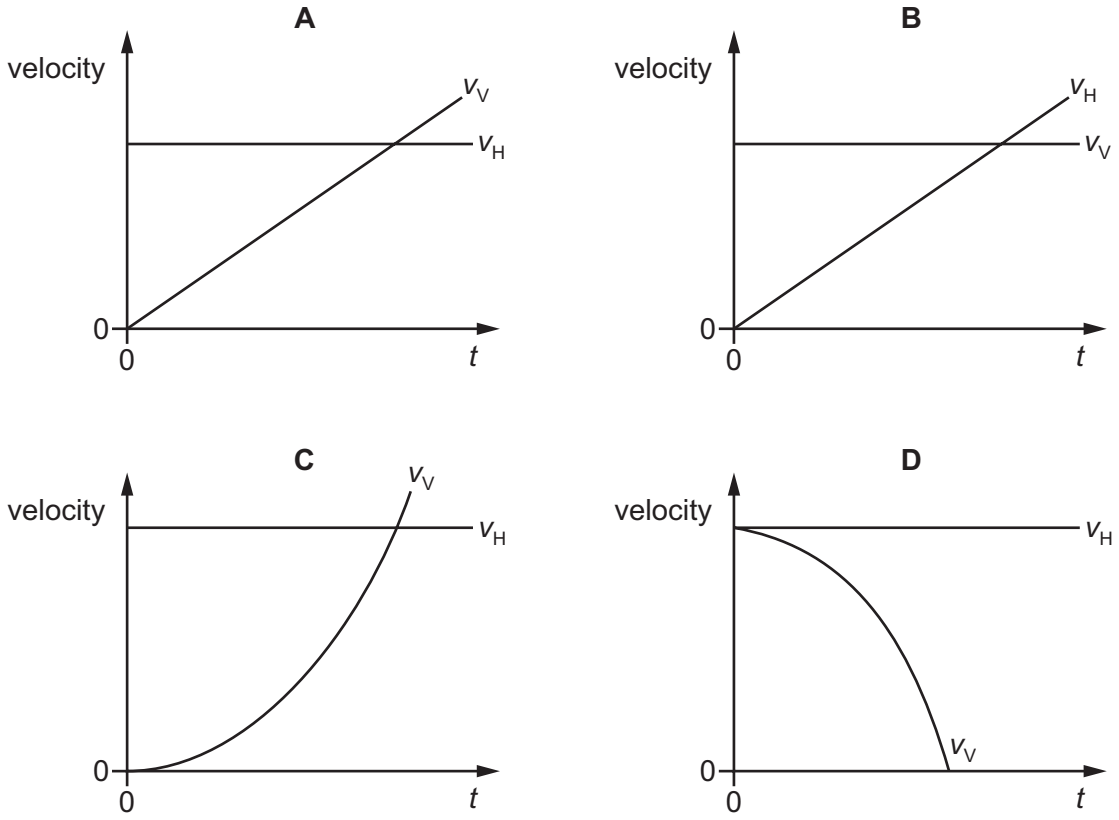

7 Two isolated spheres have masses 2.0 kg and 4.0 kg. The spheres collide and then move apart.

During the collision, the 2.0 kg mass has an average acceleration of $8.0\,m\,s^{-2}$.

What is the average acceleration of the 4.0 kg mass?

A $2.0\,m\,s^{-2}$ **B** $4.0\,m\,s^{-2}$ **C** $8.0\,m\,s^{-2}$ **D** $16\,m\,s^{-2}$

© UCLES 2018

8 A mass is placed on a frictionless slope inclined at 30° to the horizontal. The mass is then released.

What is its acceleration down the slope?

A $4.9\,m\,s^{-2}$ **B** $5.7\,m\,s^{-2}$ **C** $8.5\,m\,s^{-2}$ **D** $9.8\,m\,s^{-2}$

9 A parachutist falls vertically from rest at time $t = 0$ from a hot-air balloon. She falls for some distance before opening her parachute.

Which graph best shows the variation with time t of the speed v of the parachutist?

A

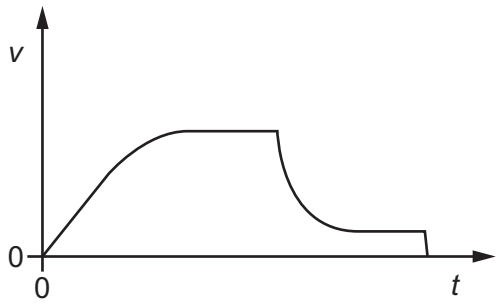

B

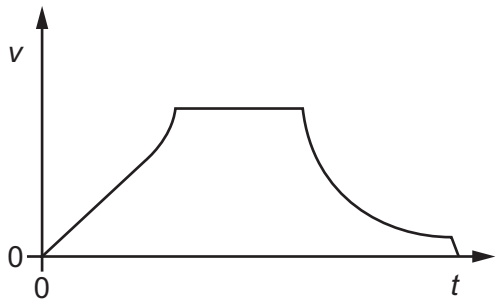

C

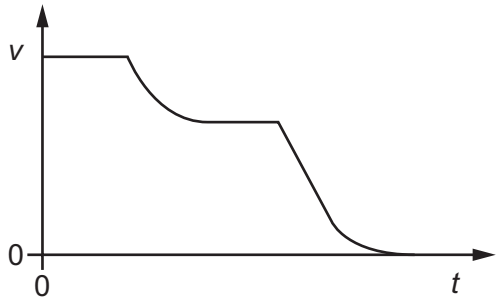

D

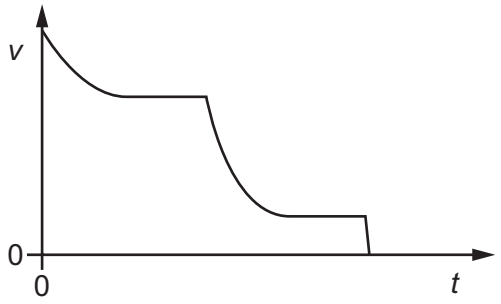

10 A ship of mass $8.4 \times 10^7\,kg$ is approaching a harbour with speed $16.4\,m\,s^{-1}$. By using reverse thrust it can maintain a constant total stopping force of 920 000 N.

How long will it take to stop?

A 15 seconds

B 150 seconds

C 25 minutes

D 250 minutes

© UCLES 2018

11 A rigid, hollow sphere is immersed deep in water and released from rest. It experiences an upthrust which propels it towards the surface of the water.

Which graph best shows the variation with time *t* of its upward velocity *v*?

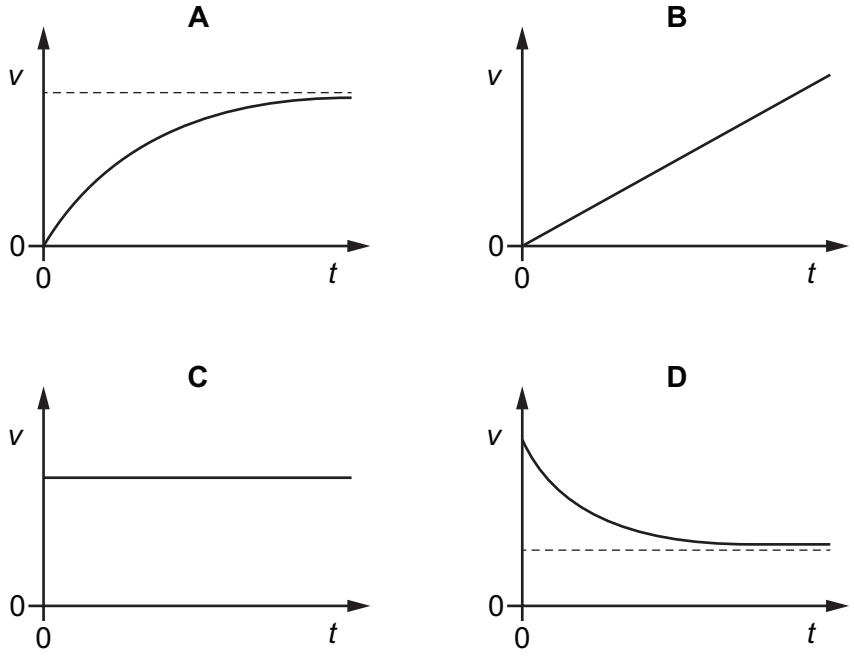

12 A flat metal disc has radius *R*.

Forces of magnitude *F* are applied tangentially at the edge of the disc. The forces are in the plane of the disc.

Which arrangement of forces produces only a torque of magnitude 2*FR*?

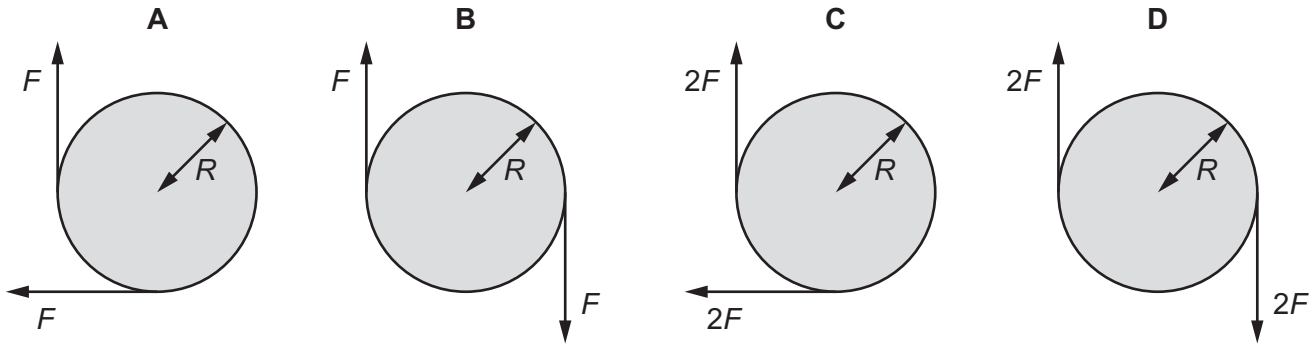

13 The diagram shows the jib of a crane at an angle of 35° to the vertical. A cable passes over a frictionless pulley and carries a load of 1830 N.

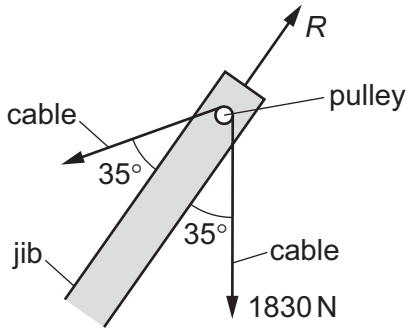

The force *R* that the pulley exerts on the cable is in line with the jib. The cable and the pulley are in equilibrium.

What is the value of *R*?

A 1000 N **B** 1500 N **C** 2100 N **D** 3000 N

14 What is a unit for density?

A $N\,m^{-3}$ **B** $g\,mm^{-1}$ **C** $kg\,cm^{-2}$ **D** $\mu g\,mm^{-3}$

15 Which statement about energy is **not** correct?

A Energy is never lost but it may be transferred between different forms.

B In an inelastic collision, the total energy is constant.

C The efficiency of a system is the ratio of the useful energy output to the total energy input.

D When a machine does work, friction reduces the total energy.

16 An electric kettle is rated as having an input power of 1.50 kW and an efficiency of 65.0%.

The kettle is switched on for 2.00 minutes.

How much energy is transferred to the water in the kettle?

A 0.975 kJ **B** 117 kJ **C** 180 kJ **D** 277 kJ

© UCLES 2018

17 On a planet, a gravitational force F acts on a mass of 6.0 kg. The mass is moved by force F a distance of 30 m in the direction of the gravitational field. The work done by the field is 450 J.

What is the force F on the mass and what is the acceleration of free fall g on the planet?

	F / N	g / m s^{-2}
A	0.067	0.011
B	0.067	0.40
C	15	2.5
D	15	90

18 A girl of mass 50 kg runs up a flight of 20 steps in 7.0 seconds. Each step is 25 cm high.

What is the useful average output power provided by the girl to climb the flight of steps?

A 18 W **B** 36 W **C** 350 W **D** 2500 W

© UCLES 2018

19 In an experiment to measure the Young modulus of a metal, a wire of the metal of diameter 0.25 mm is clamped, as shown.

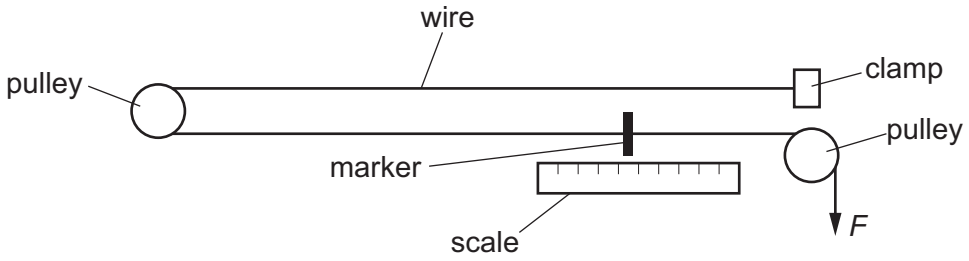

The wire passes from a clamp, around a frictionless pulley, and then to a second frictionless pulley where loads *F* are applied to it. A marker is attached to the wire so that the total length of wire between the clamp and the marker is initially 3.70 m. A scale is fixed near to this marker.

The graph shows how the reading on the scale varies with *F*.

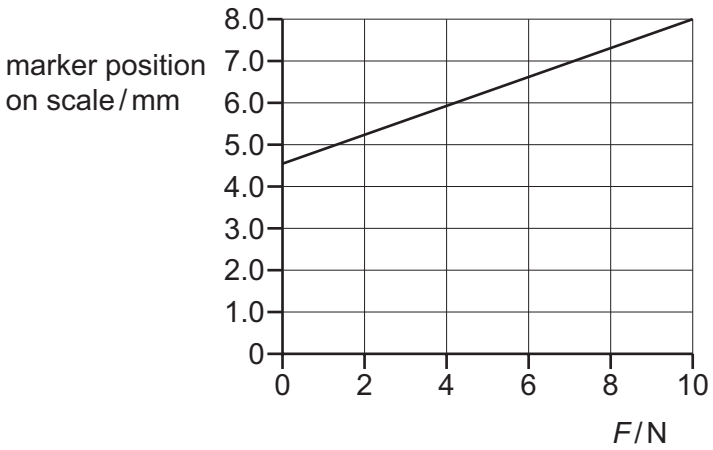

What is the Young modulus of the metal?

A 5.5×10^{10} Pa

B 9.4×10^{10} Pa

C 1.6×10^{11} Pa

D 2.2×10^{11} Pa

© UCLES 2018

20 A scientist is investigating the properties of a new material. She plots a force-extension graph for the material up to its breaking point.

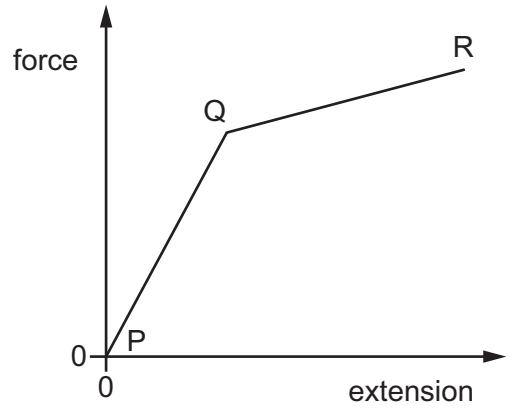

Which statement **must** be correct?

A The area under the graph from P to R is the strain energy stored in the material.

B The area under the graph from P to R is the work done in stretching the material.

C The material stretches elastically from Q to R.

D The material stretches plastically from P to Q.

21 A progressive sound wave in air has amplitude x_0 and intensity I.

The amplitude of the wave increases to $3x_0$.

What is the new intensity of the wave?

A $\frac{I}{9}$ **B** $\frac{I}{3}$ **C** $3I$ **D** $9I$

22 The variation with distance x of the displacement y of a transverse wave on a rope is shown at time $t = 0$.

The wave has a frequency of 0.5 Hz.

A point X on the rope is marked. The diagram shows the original position of X and four new positions.

What is the position of X at time $t = 1$ s?

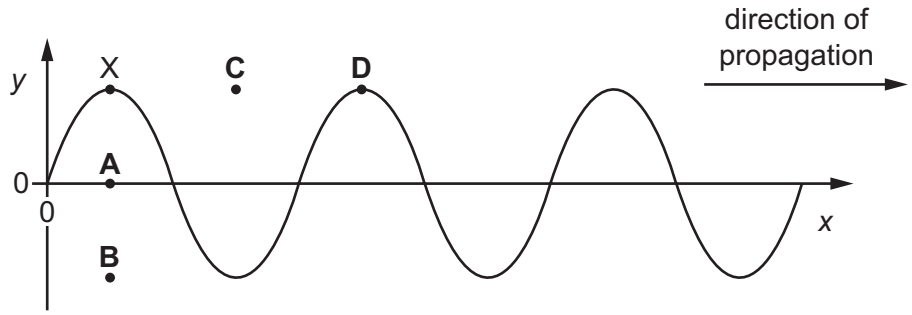

23 A sound wave is detected by a microphone. The output from the microphone is connected to the Y-input of a cathode-ray oscilloscope (c.r.o.). The trace on the c.r.o. is shown.

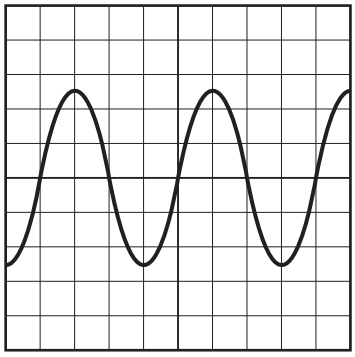

The time-base is set at 0.20 ms per division.

What is the frequency of the sound wave?

A 1000 Hz **B** 1250 Hz **C** 2000 Hz **D** 2500 Hz

24 A bat flies directly towards a fixed ultrasound detector at a speed of 25.0 $m\,s^{-1}$ emitting pulses of ultrasound of frequency 40.0 kHz.

The speed of sound in air is 330 $m\,s^{-1}$.

Which frequency does the ultrasound detector record?

A 37.0 kHz **B** 37.2 kHz **C** 43.0 kHz **D** 43.3 kHz

© UCLES 2018

25 An electromagnetic wave has a wavelength of 1.0×10^{-7} m.

To which region of the electromagnetic spectrum does this wave belong?

A infra-red

B ultraviolet

C visible

D X-ray

26 The diagram shows a stationary wave on a string. The stationary wave has three nodes N_1, N_2 and N_3.

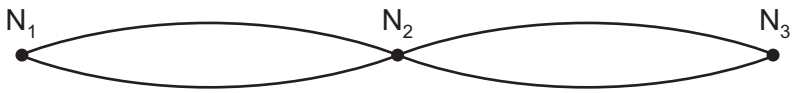

Which statement is correct?

A All points on the string vibrate in phase.

B All points on the string vibrate with the same amplitude.

C Points equidistant from N_2 vibrate with the same frequency and in phase.

D Points equidistant from N_2 vibrate with the same frequency and the same amplitude.

27 In which situation does diffraction occur?

A A wave bounces back from a surface.

B A wave passes from one medium into another.

C A wave passes through an aperture.

D Waves from two identical sources are superposed.

© UCLES 2018

28 A student connects two loudspeakers to a signal generator.

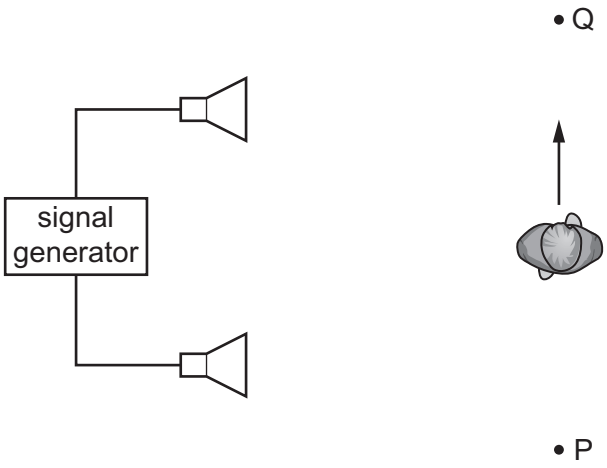

As the student walks from P to Q, he notices that the loudness of the sound rises and falls repeatedly.

What causes the loudness of the sound to vary?

A diffraction of the sound waves

B Doppler shift of the sound waves

C interference of the sound waves

D reflection of the sound waves

29 A parallel beam of white light is incident normally on a diffraction grating. The second-order and third-order spectra partially overlap.

Which wavelength in the third-order spectrum appears at the same angle as the wavelength of 600 nm in the second-order spectrum?

A 300 nm **B** 400 nm **C** 600 nm **D** 900 nm

© UCLES 2018

30 Two parallel metal plates are at electric potentials of +800 V and +1300 V.

Which diagram best represents the electric field between the metal plates?

A

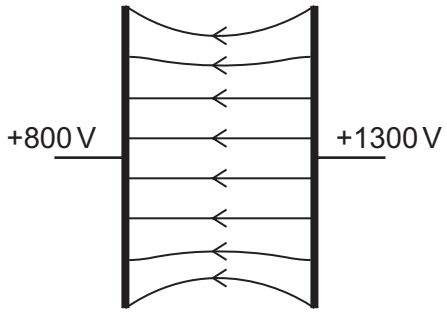

B

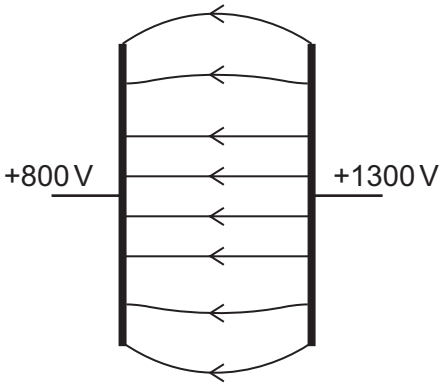

C

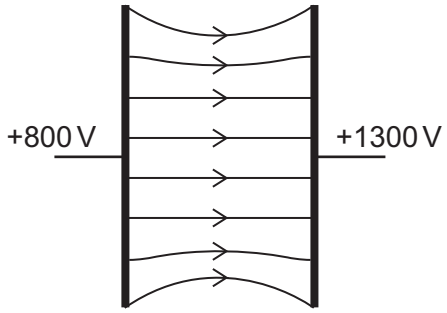

D

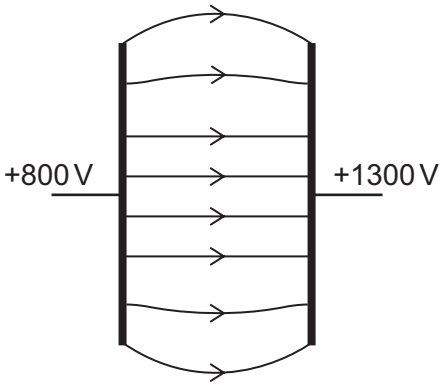

31 The diagram shows two metal plates P and Q. There is a potential difference of 700 V between the plates. Plate Q is earthed.

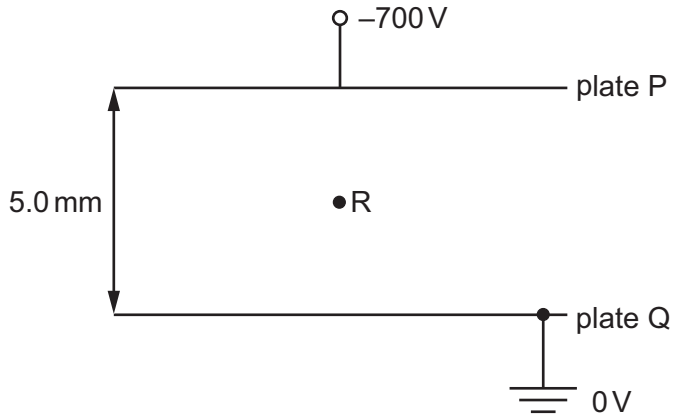

What is the magnitude and direction of the electric field at point R?

A $1.4 \times 10^2\,\text{N C}^{-1}$ from P towards Q

B $1.4 \times 10^2\,\text{N C}^{-1}$ from Q towards P

C $1.4 \times 10^5\,\text{N C}^{-1}$ from P towards Q

D $1.4 \times 10^5\,\text{N C}^{-1}$ from Q towards P

32 The current I in a copper wire can be calculated using the equation shown.

$$I = Anvq$$

What does the symbol v represent?

A the average drift velocity of the charge carriers

B the instantaneous velocity of the charge carriers

C the voltage applied across the wire

D the volume of the wire

33 Three resistors are to be connected into a circuit with the arrangement shown.

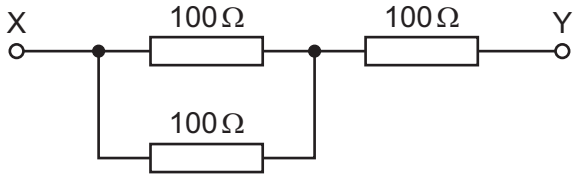

The power in any resistor must not be greater than 4.0 W.

What is the maximum voltage across XY?

A 24 V **B** 30 V **C** 40 V **D** 60 V

© UCLES 2018

34 Gold is sometimes used to make very small connecting wires in electronic circuits.

A particular gold wire has length 2.50×10^{-3} m and cross-sectional area 6.25×10^{-8} m^2. Gold has resistivity $2.30 \times 10^{-8}\,\Omega$m.

What is the resistance of the wire?

A $3.6 \times 10^{-18}\,\Omega$

B $5.8 \times 10^{-13}\,\Omega$

C $9.2 \times 10^{-4}\,\Omega$

D $6.8 \times 10^{-3}\,\Omega$

35 A resistor X of resistance $40\,\Omega$ and a variable resistor are connected to a battery of electromotive force (e.m.f.) 12 V and internal resistance $2.0\,\Omega$, as shown.

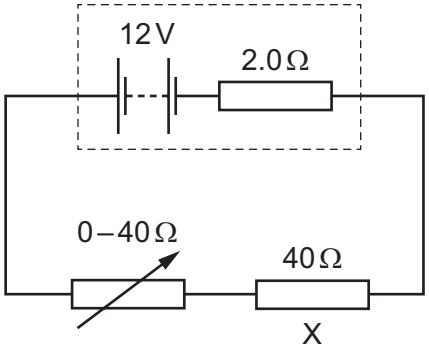

The resistance of the variable resistor is changed from 0 to $40\,\Omega$.

What is the change in power dissipated in resistor X?

A 2.4 W **B** 2.7 W **C** 3.6 W **D** 5.6 W

36 All the resistors shown in the resistor networks W, X, Y and Z have the same resistance.

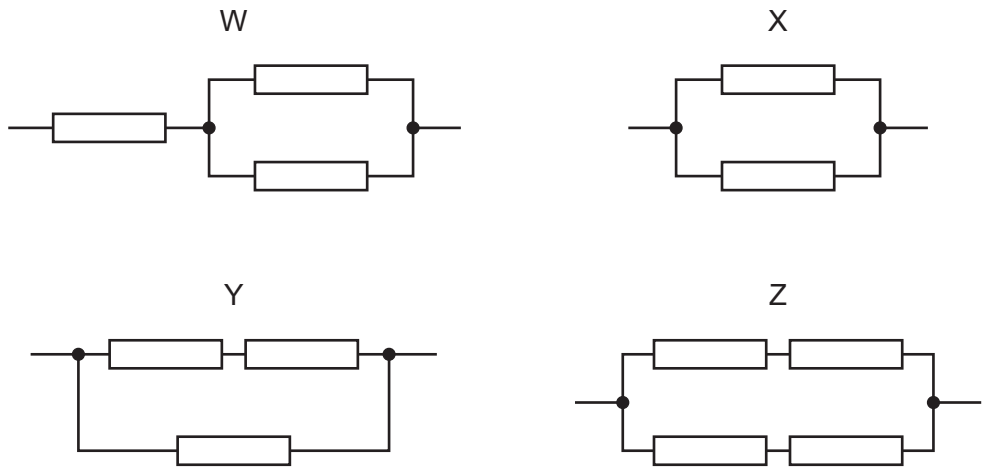

Which list gives the networks in order of increasing total resistance?

A W → Z → Y → X

B X → W → Y → Z

C X → Y → W → Z

D X → Y → Z → W

37 In the circuit shown, the ammeter reading is zero.

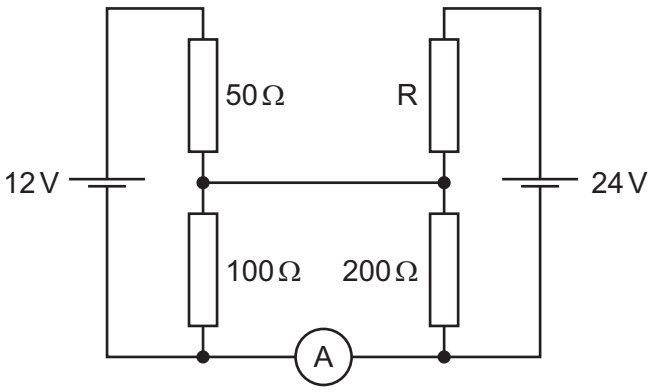

What is the resistance of resistor R?

A 100 Ω **B** 200 Ω **C** 400 Ω **D** 600 Ω

38 A neutron collides with a nucleus of uranium-235. One possible nuclear reaction that results is represented by the equation

$$^{235}_{92}\text{U} + ^{1}_{0}\text{n} \rightarrow ^{154}_{60}\text{Nd} + ^{80}_{32}\text{Ge} + \text{x}$$

where x represents one or more particles.

What does x represent?

A one neutron

B two electrons

C two neutrons

D two protons

39 A nucleus Q has the notation $^{y}_{x}\text{Q}$.

Which of the following is an isotope of Q?

A $^{y-1}_{x}\text{Q}$ **B** $^{y}_{x-1}\text{Q}$ **C** $^{y}_{x+1}\text{Q}$ **D** $^{y-1}_{x+1}\text{Q}$

40 In β^- decay, a neutron inside a nucleus changes to a proton.

Which statement describes the quark composition of the nucleus during the decay?

A The number of down quarks decreases by one.

B The number of down quarks increases by one.

C The number of down quarks stays the same.

D The number of up quarks stays the same.

© UCLES 2018

BLANK PAGE

Permission to reproduce items where third-party owned material protected by copyright is included has been sought and cleared where possible. Every reasonable effort has been made by the publisher (UCLES) to trace copyright holders, but if any items requiring clearance have unwittingly been included, the publisher will be pleased to make amends at the earliest possible opportunity.

To avoid the issue of disclosure of answer-related information to candidates, all copyright acknowledgements are reproduced online in the Cambridge International Examinations Copyright Acknowledgements Booklet. This is produced for each series of examinations and is freely available to download at www.cie.org.uk after the live examination series.

Cambridge International Examinations is part of the Cambridge Assessment Group. Cambridge Assessment is the brand name of University of Cambridge Local Examinations Syndicate (UCLES), which is itself a department of the University of Cambridge.